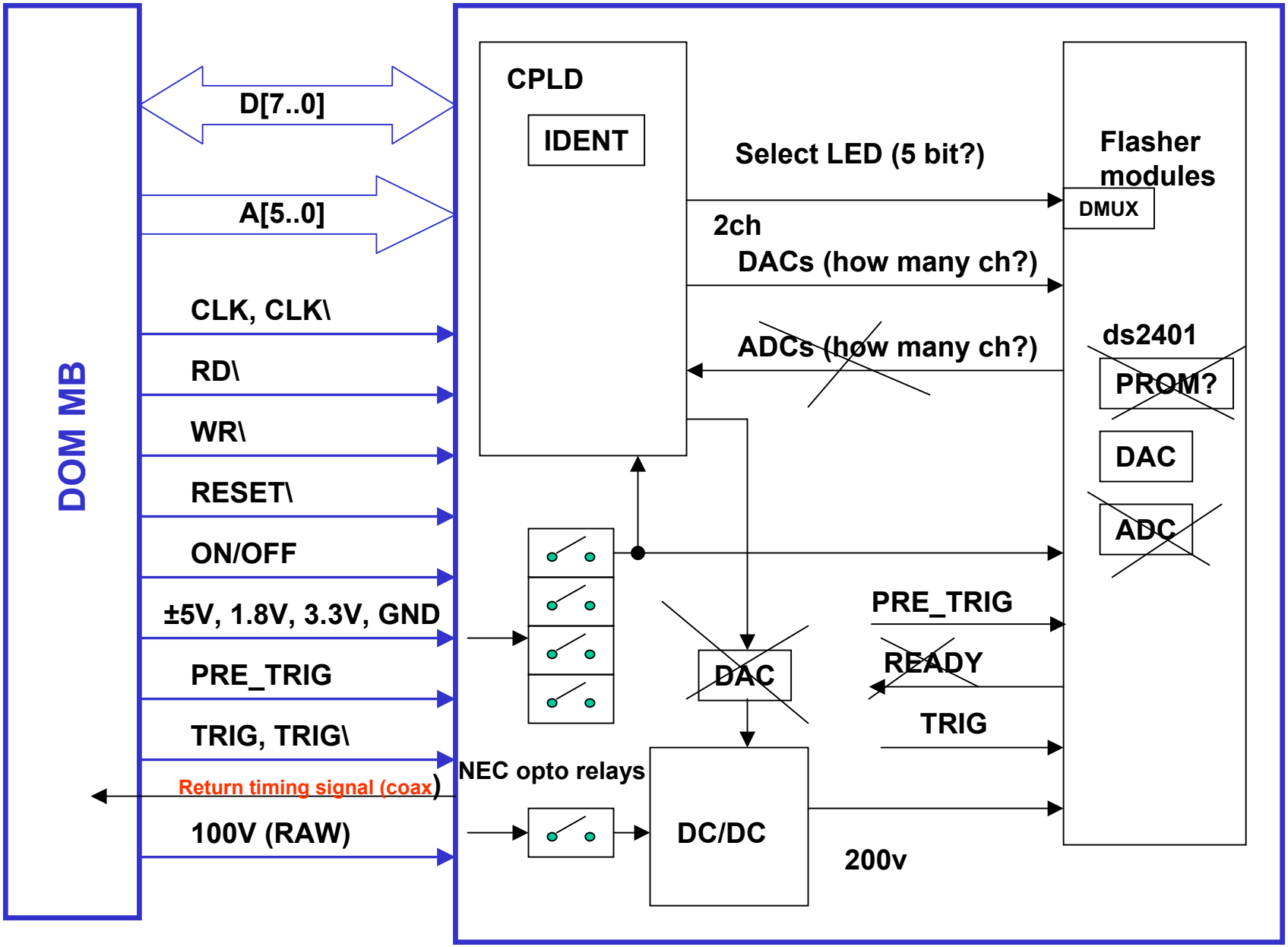
DOM MB
D[7..0]
A[5..0]
CLK, CLK\
RD\
WR\
RESET\
ON/OFF
±5V, 1.8V, 3.3V, GND
PRE_TRIG
TRIG, TRIG\
Return timing signal (coax)
100V (RAW)
CPLD
IDENT
Select LED (5 bit?)
2ch
DACs (how many ch?)
ADCs (how many ch?)
NEC opto relays
DAC
DC/DC
200v
Flasher modules
DMUX
ds2401
PROM?
DAC
ADC
PRE_TRIG
READY
TRIG
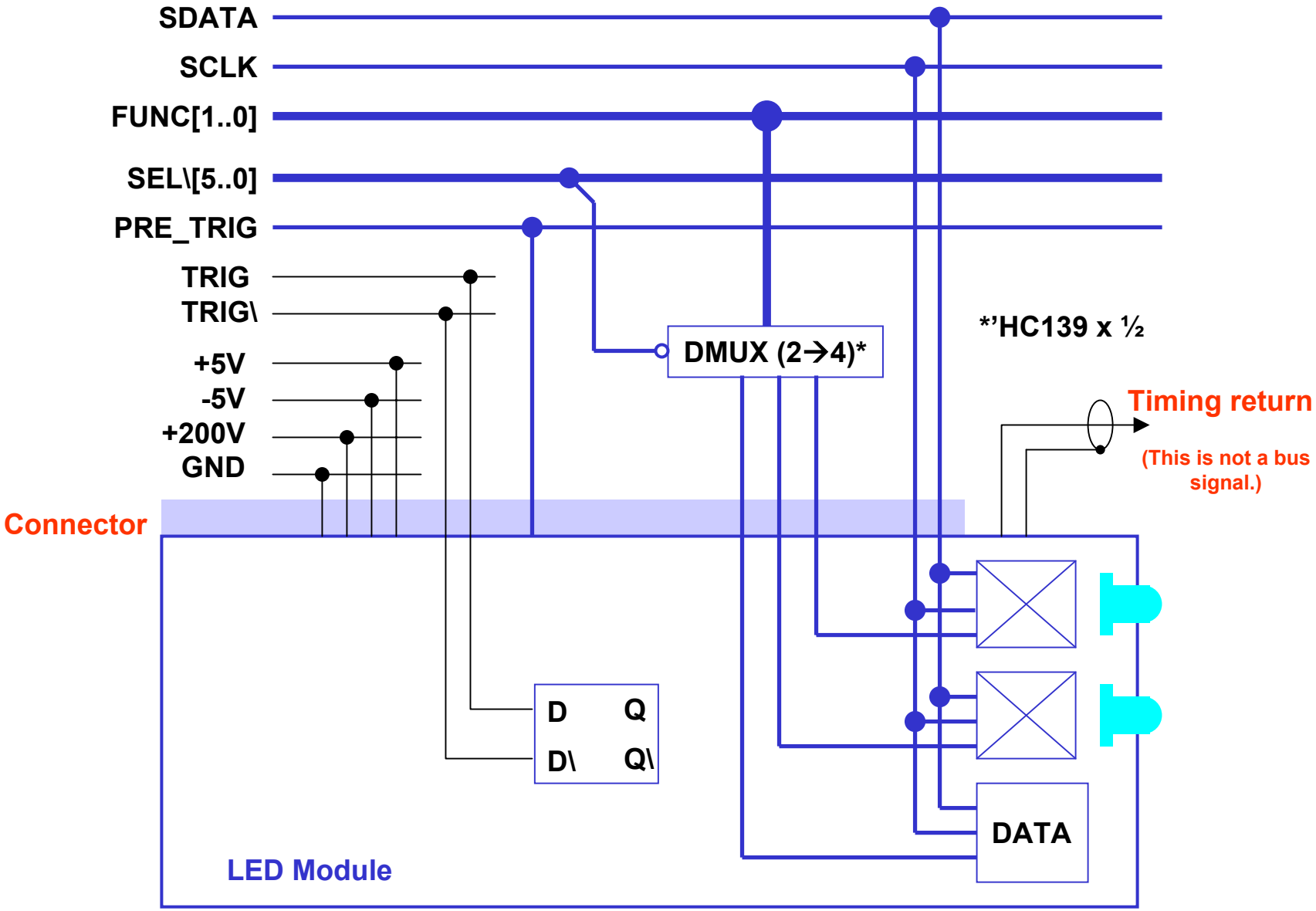
Flasher Board Signal Buses